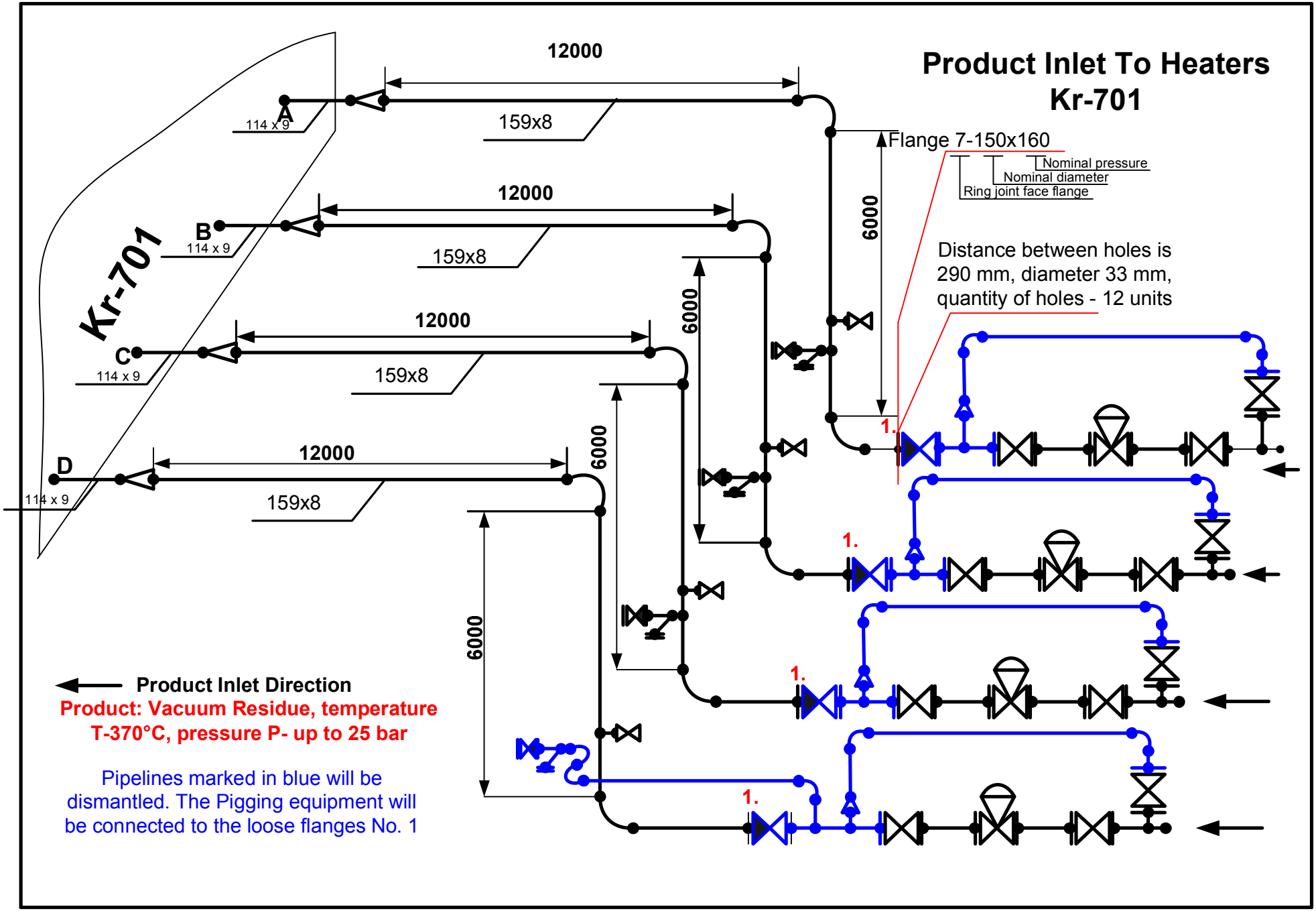
Product Inlet To Heaters
Kr-701
12000
159x8
114 x 9
A
B
C
D
Kr-701
6000
Flange 7-150x160
Nominal pressure
Nominal diameter
Ring joint face flange
Distance between holes is
290 mm, diameter 33 mm,
quantity of holes - 12 units
1.
Product Inlet Direction
Product: Vacuum Residue, temperature
T-370°C, pressure P- up to 25 bar
Pipelines marked in blue will be
dismantled. The Pigging equipment will
be connected to the loose flanges No. 1